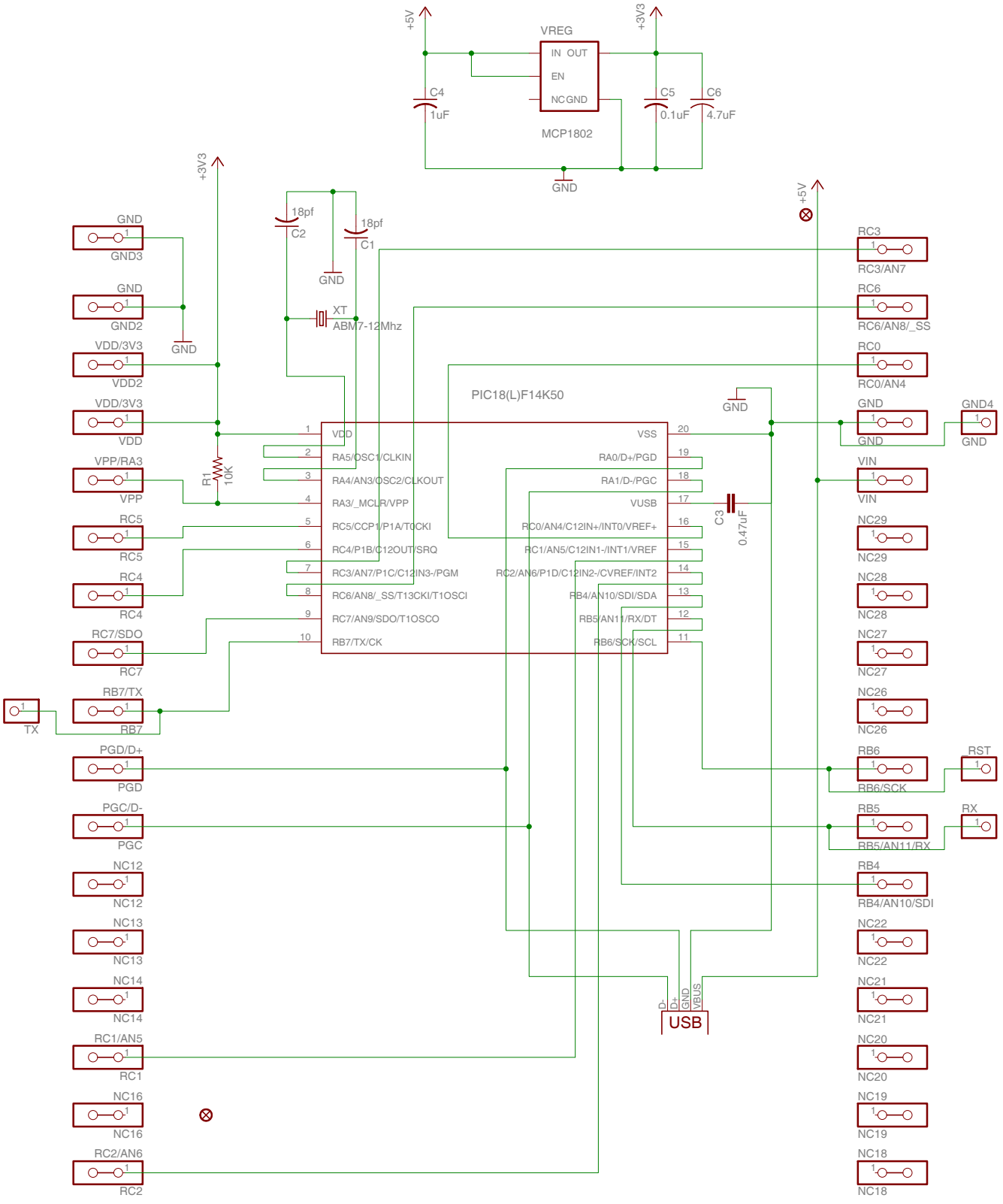
VREG
IN OUT
EN
NC GND
MCP1802
+5V
+3V3
C4
1uF
C5
0.1uF
C6
4.7uF
GND
18pf
C2
C1
XT
ABM7-12Mhz
PIC18(L)F14K50
VDD
RA5/OSC1/CLKIN
RA4/AN3/OSC2/CLKOUT
RA3/_MCLR/VPP
RC5/CCP1/P1A/T0CKI
RC4/P1B/C12OUT/SRQ
RC3/AN7/P1C/C12IN3-/PGM
RC6/AN8/_SS/T13CKI/T1OSCI
RC7/AN9/SDO/T1OSCO
RB7/TX/CK
VSS
RA0/D+/PGD
RA1/D-/PGC
VUSB
RC0/AN4/C12IN+/INT0/VREF+
RC1/AN5/C12IN1-/INT1/VREF
RC2/AN6/P1D/C12IN2-/CVREF/INT2
RB4/AN10/SDI/SDA
RB5/AN11/RX/DT
RB6/SCK/SCL
R1
10K
C3
0.47uF
USB
D-
D+
GND
VBUS
GND3
GND2
VDD2
VDD
VPP
RC5
RC4
RC7
RB7
TX
PGD
PGC
NC12
NC13
NC14
RC1
NC16
RC2
RC3
RC3/AN7
RC6
RC6/AN8/_SS
RC0
RC0/AN4
GND4
VIN
NC29
NC28
NC27
NC26
RB6
RB6/SCK
RST
RB5
RB5/AN11/RX
RX
RB4
RB4/AN10/SDI
NC22
NC21
NC20
NC19
NC18